MOX sistemi - tehnična dokumentacija

assembly-manual-mps-l-en.pdf

Tehnični prevod: za dimenzije si oglejte izvirne risbe in referenčne strani.

Izvorna stran 1

NAVODILA ZA SESTAVLJANJE Mps-L

Izberite pravi profil glede na debelino ploščice.

2 Nanesite spoj in ustrezno namestite sidra za profile.

3 Pritisnite profil, dokler ni pritrjen na spoj.

Na mestih, kjer bomo polagali keramiko, naredimo fugo.

5 Ploščice položite na profil, pazite, da se njihovi robovi prilegajo profilu in so poravnani.

6 Za zunanje vogale odrežite profile pod kotom 45 stopinj.

Poravnajte profile na zunanjih vogalih in jih vtisnite v spoj.

8 Ploščice položite na profil, pazite, da se njihovi robovi prilegajo profilu in so poravnani.

9 Za notranje vogale odrežite profile pod kotom 45 stopinj.

10 Poravnajte profile na notranjih vogalih in jih vtisnite v spoj.

11 Ploščice položite na profil, pazite, da se njihovi robovi prilegajo profilu in so poravnani.

Stran 1/1

Izvirne risbe in referenčne strani

MPS-L ASSEMBLY GUIDE

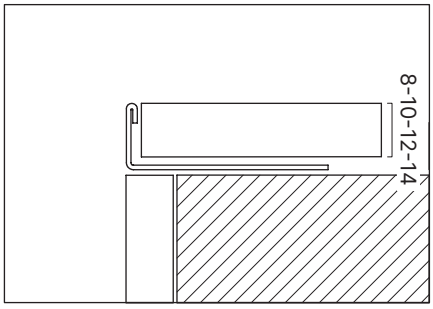

1 Pick the correct profile according to the tile thickness.

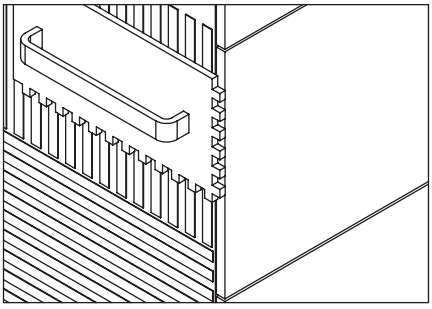

2 Apply joint and place the profiles anchor accordingly.

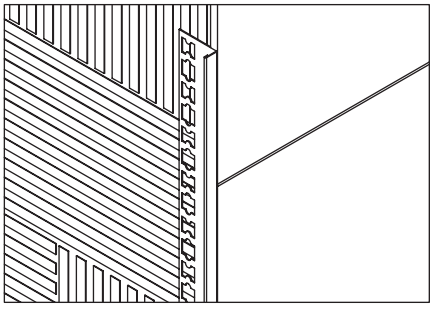

3 Press the profile until it is fixed to the joint.

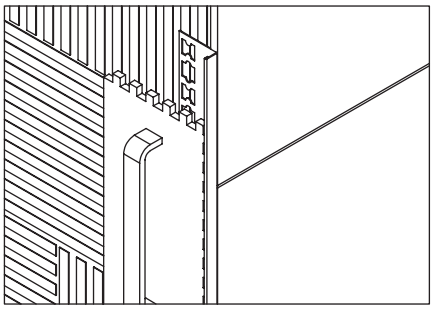

4 Apply joint to the places where the ceramics will be placed.

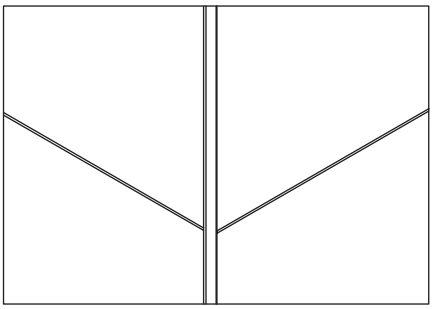

5 Place the tiles on the profile, making sure that their edges fit the profile and are flush.

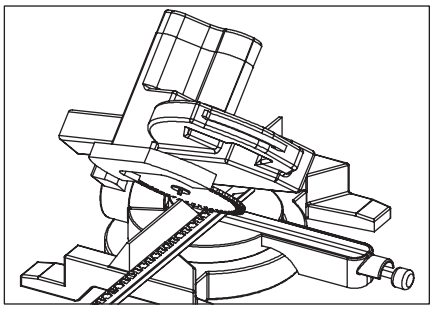

6 Cut profiles 45 degrees for external corners.

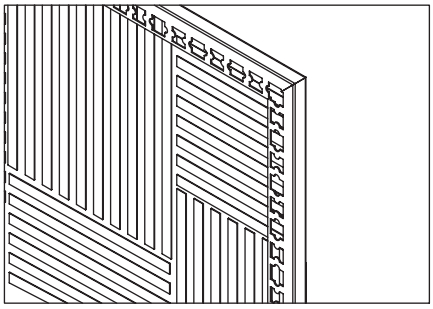

7 Align the profiles at the external corners and press them into the joint.

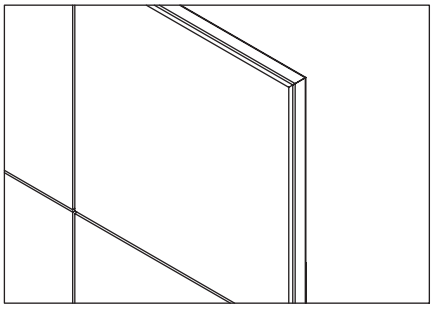

8 Place the tiles on the profile, making sure that their edges fit the profile and are flush.

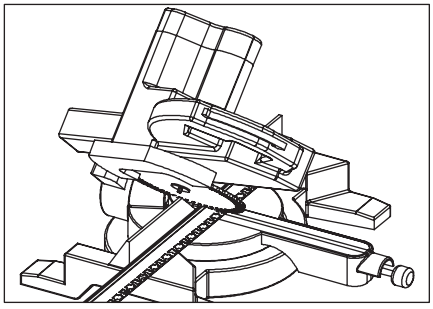

9 Cut profiles 45 degrees for internal corners.

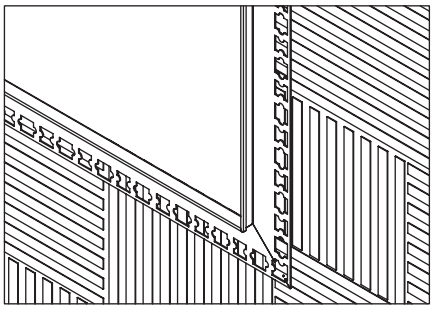

10 Align the profiles at the internal corners and press them into the joint.

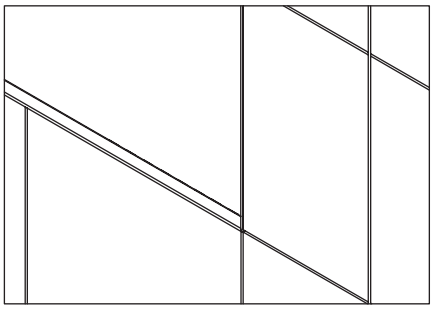

11 Place the tiles on the profile, making sure that their edges fit the profile and are flush.