MOX sistemi - tehnična dokumentacija

assembly-manual-mps-e-en.pdf

Tehnični prevod: za dimenzije si oglejte izvirne risbe in referenčne strani.

Izvorna stran 1

NAVODILA ZA SESTAVLJANJE Mps-E

1 Izberite pravi profil glede na debelino talne obloge.

2 Nanesite spoj in ustrezno namestite sidra za profile.

3 Pritisnite profil, dokler ni pritrjen na spoj.

4 Nanesite spoj na mesta, kjer boste položili talno oblogo.

5 Postavite in poravnajte talno oblogo s profilom.

6 Za zunanje vogale odrežite profile pod kotom 45 stopinj.

Poravnajte profile na zunanjih vogalih in jih vtisnite v spoj.

8 Postavite in poravnajte talno oblogo s profilom.

9 Za notranje vogale odrežite profile pod kotom 45 stopinj.

10 Poravnajte profile na notranjih vogalih in jih vtisnite v spoj.

11 Postavite in poravnajte talno oblogo s profilom.

Stran 1/1

Izvirne risbe in referenčne strani

MPS-E ASSEMBLY GUIDE

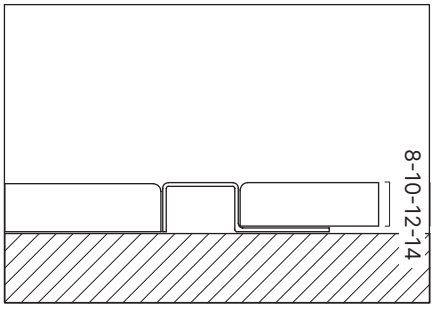

1 Pick the correct profile according to the flooring thickness.

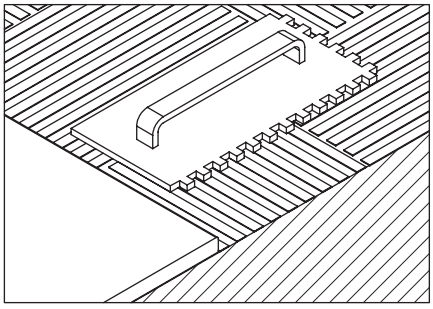

2 Apply joint and place the profiles anchor accordingly.

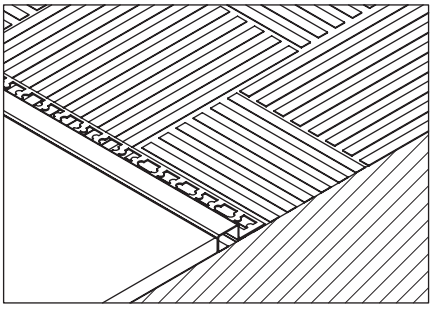

3 Press the profile until it is fixed to the joint.

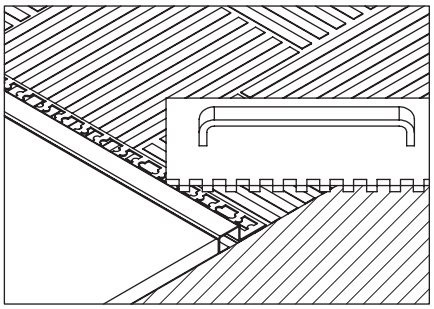

4 Apply joint to the places where the flooring will be placed.

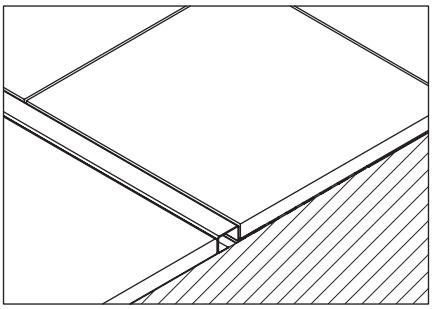

5 Place and align the flooring to the profile.

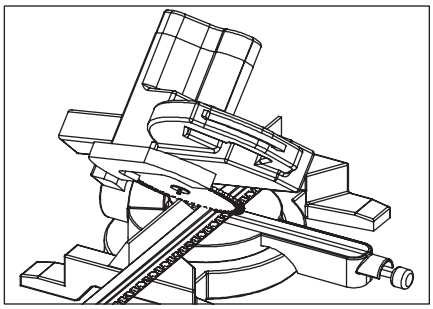

6 Cut profiles 45 degrees for external corners.

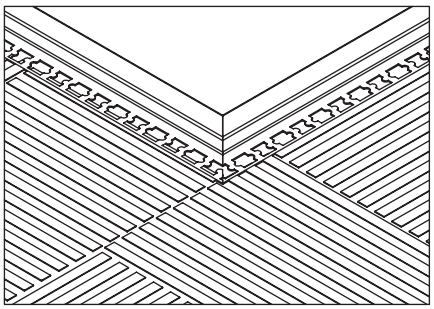

7 Align the profiles at the external corners and press them into the joint.

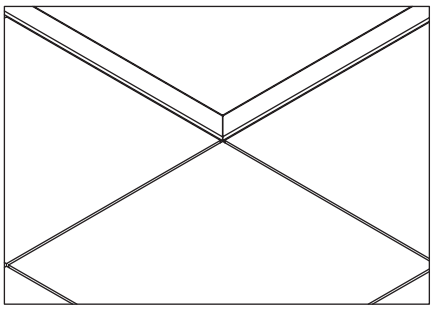

8 Place and align the flooring to the profile.

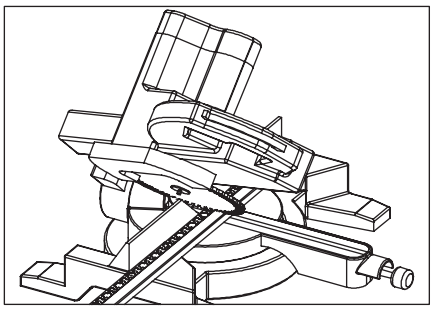

9 Cut profiles 45 degrees for internal corners.

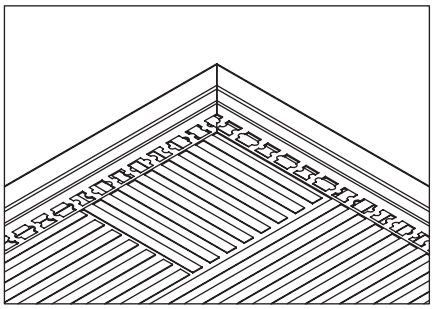

10 Align the profiles at the internal corners and press them into the joint.

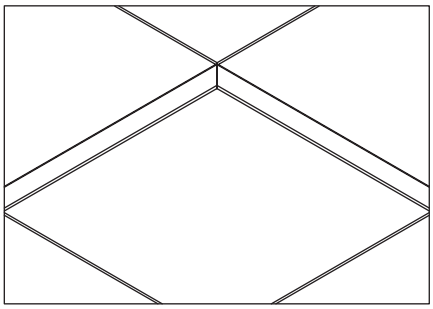

11 Place and align the flooring to the profile.