MOX sistemi - tehnična dokumentacija

assembly-manual-leux-en.pdf

Tehnični prevod: za dimenzije si oglejte izvirne risbe in referenčne strani.

Izvorna stran 1

NAVODILA ZA SESTAVLJANJE Leux

1 Namestitev lahko izvedete z vijaki ali silikonskim lepilom.

Pravilno uporabo je treba natančno določiti glede na material stene.

2 V izvrtane luknje vstavite ustrezne moznike glede na material stene.

3 Privijte dele za pritrditev na steno na mesta, ki so izvrtana v intervalih 50 cm.

4 LED trakove vstavite v reže na vrhu in na dnu profila.

5 Potisnite, da povežete spodnji difuzor s sprednjim pokrovom.

6 Povežite trakove LED in gonilnik ter gonilnik na električno omrežje.

Kable lahko nosite znotraj profilov za povezave z več pogoni.

Za natančne rezultate se posvetujte z lokalnimi električarji.

7 Pritisnite sprednji pokrov ob zadnjo ploščo, dokler se ne zaskoči.

8 Vstavite zgornji difuzor.

9 Nanesite lepilo na notranje vogale, da jih pritrdite na svoje mesto.

10 Zunanje vogale nanesite z lepilom, da jih pritrdite na svoje mesto.

11 Na končne dele nanesite lepilo, da jih pritrdite na svoje mesto.

Stran 1/2

Izvorna stran 2

REZANJE & PODALJŠEVANJE LED TRAKOV

Za pravilno delovanje lokacije, navedene v

LED trak, izrezan samo iz diagrama e.

Da preprečite odklop b na označenem mestu

med trakom LED spajkajte samo d na vzorčni risbi.

SHEMA OŽIČENJA LED TRAKOV

MOX RGB krmilnik

RG Dim Wifi

GB mmer

Gonilnik / transformacija

mer

Stran 2/2

Izvirne risbe in referenčne strani

LEUX ASSEMBLY GUIDE

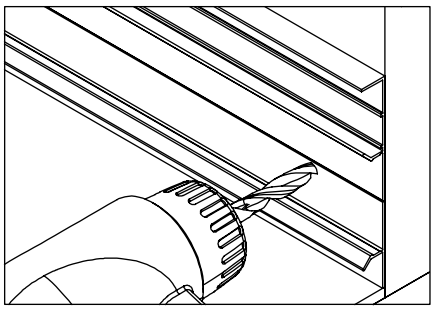

1 Installation can be done with screws or silicone glue. The correct application must be carefully identified according to the wall material.

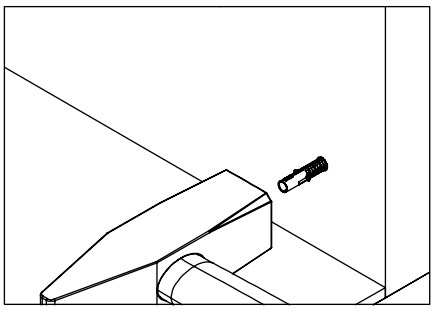

2 Place the correct dowels according to the wall material into the drilled holes.

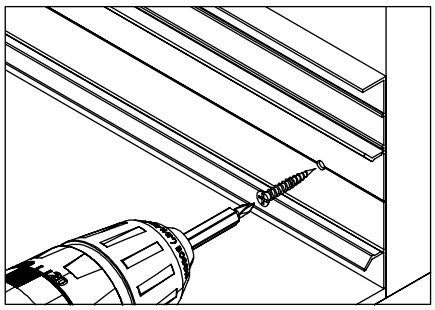

3 Screw the wall fixation parts to the places that are drilled at 50cm intervals.

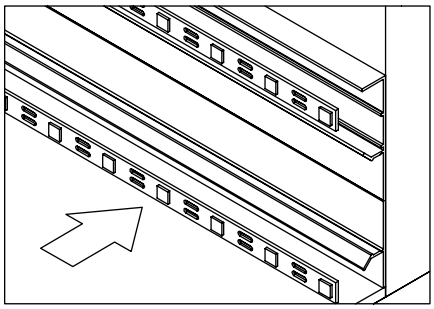

4 Insert the LED strips into the slots at the top and bottom of the profile.

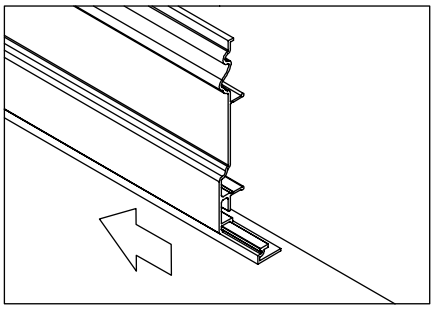

5 Slide to connect the bottom diffuser to the front cover.

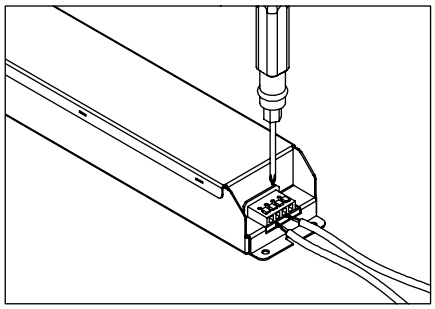

6 Connect the LED strips and the driver and the driver to the mains. Cables can be carried within the profiles for multi-drive connections. Consult local electricians to obtain accurate results.

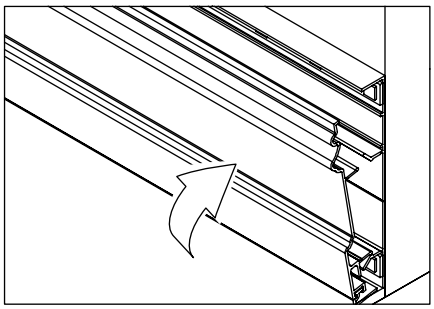

7 Press the front cover against the back plate until itclicks into place.

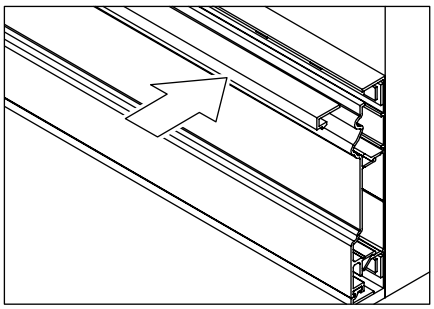

8 Insert the top diffuser.

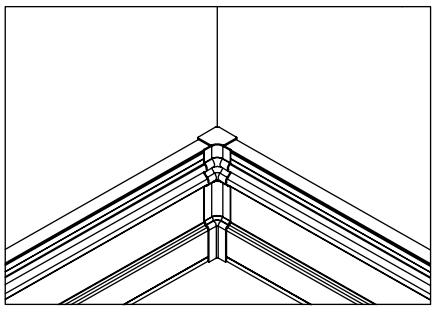

9 Apply adhesive to the internal corners to secure them in position.

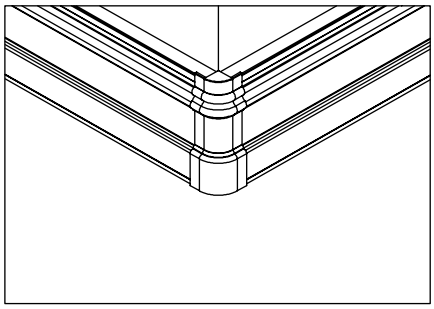

10 Apply adhesive to the external corners to secure them in position.

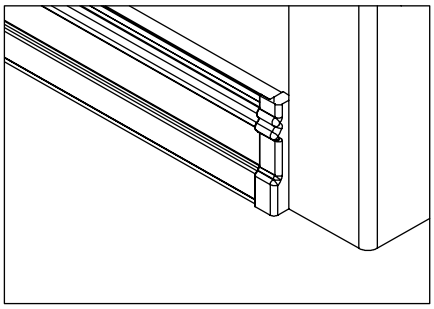

11 Apply adhesive to the ending parts to secure them in position.

LED STRIP CUTTING & EXTENDING

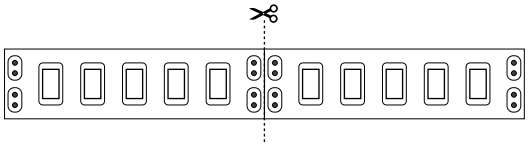

For correct operation of the LED Strip, cut only from the location indicated in the diagram.

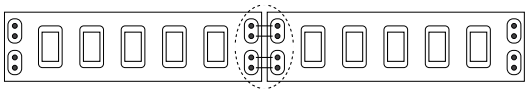

To avoid disconnection between the LED Strip, solder only at the location indicated in the sample drawing.
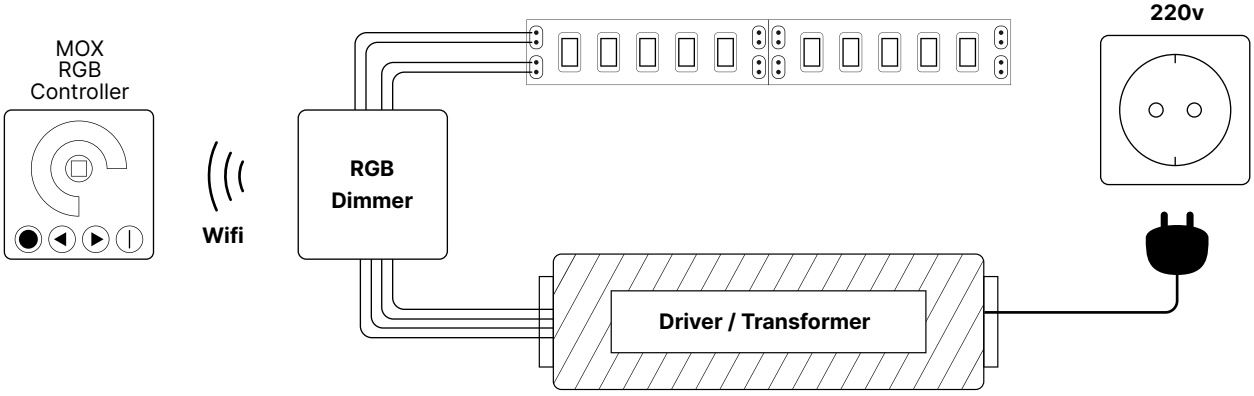
LED STRIP WIRING DIAGRAM