Sistemi MOX - dokumentazzjoni teknika

assembly-manual-mps-f-en.pdf

Traduzzjoni teknika: ikkonsulta t-tpinġijiet oriġinali u l-paġni ta’ referenza għad-dimensjonijiet.

Paġna tas-sors 1

Mps-F GWIDA GĦALL-ASSEMBLJA

1 Agħżel il-profil korrett skont il-ħxuna tal-madum.

2 Applika konġunta u poġġi l-ankra tal-profili kif xieraq.

3 Agħfas il-profil sakemm ikun imwaħħal mal-ġonta.

4 Applika konġunti għall-postijiet fejn se titqiegħed iċ-ċeramika.

5 Poġġi l-madum fuq il-profil, kun żgur li t-truf tagħhom jaqblu mal-profil u huma flush.

6 Aqta 'profili 45 grad għall-kantunieri esterni.

7 Allinja l-profili fil-kantunieri esterni u agħfashom fil-ġonta.

8 Poġġi l-madum fuq il-profil, kun żgur li t-truf tagħhom jaqblu mal-profil u huma flush.

9 Aqta 'profili 45 grad għall-kantunieri esterni.

10 Allinja l-profili fil-kantunieri interni u agħfashom fil-ġonta.

11 Poġġi l-madum fuq il-profil, kun żgur li t-truf tagħhom jaqblu mal-profil u huma flush.

Paġna 1/1

Tpinġijiet oriġinali u paġni ta' referenza

MPS-F ASSEMBLY GUIDE

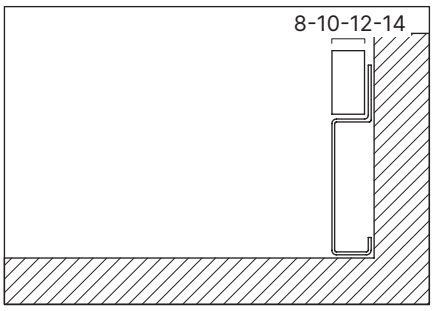

1 Pick the correct profile according to the tile thickness.

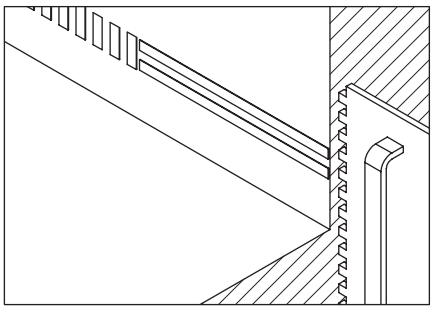

2 Apply joint and place the profiles anchor accordingly.

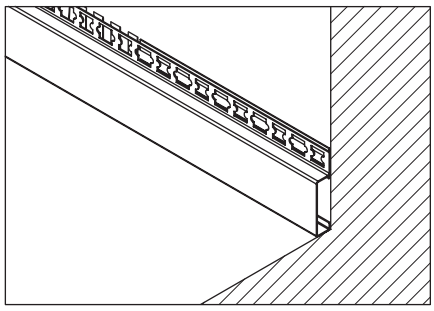

3 Press the profile until it is fixed to the joint.

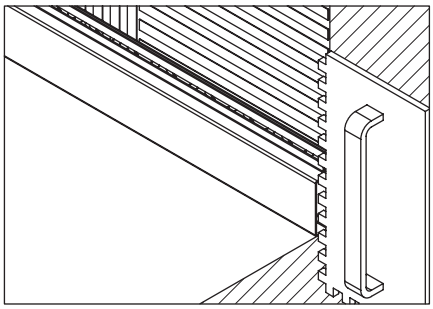

4 Apply joint to the places where the ceramics will be placed.

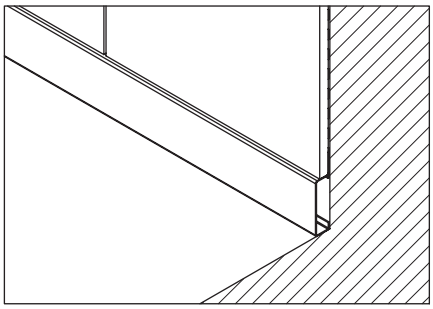

5 Place the tiles on the profile, making sure that their edges fit the profile and are flush.

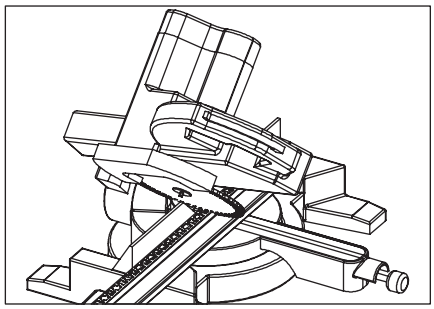

6 Cut profiles 45 degrees for external corners.

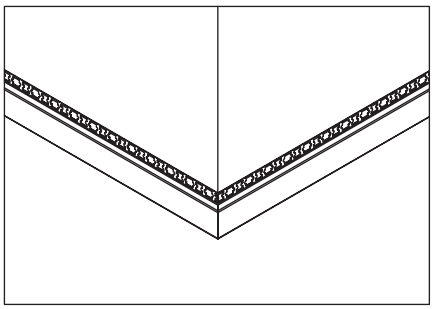

7 Align the profiles at the external corners and press them into the joint.

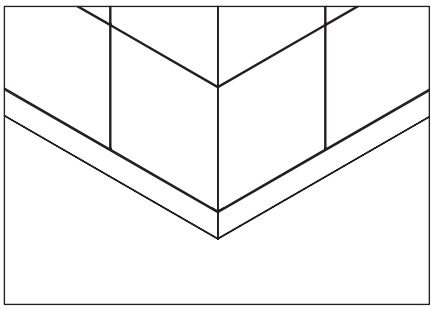

8 Place the tiles on the profile, making sure that their edges fit the profile and are flush.

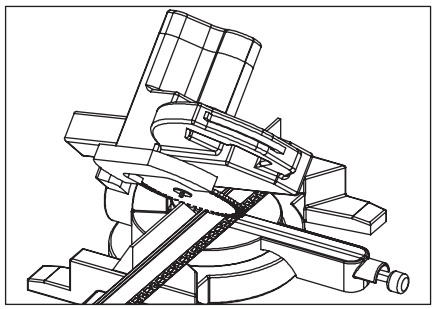

9 Cut profiles 45 degrees for external corners.

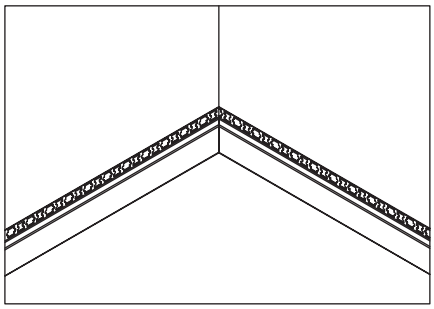

10 Align the profiles at the internal corners and press them into the joint.

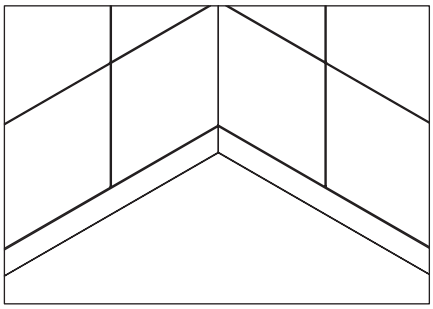

11 Place the tiles on the profile, making sure that their edges fit the profile and are flush.