Sistemi MOX - dokumentazzjoni teknika

assembly-manual-leux-en.pdf

Traduzzjoni teknika: ikkonsulta t-tpinġijiet oriġinali u l-paġni ta’ referenza għad-dimensjonijiet.

Paġna tas-sors 1

GWIDA GĦALL-ASSEMBLJA Leux

1 L-installazzjoni tista 'ssir b'viti jew kolla tas-silikon.

L-applikazzjoni korretta għandha tiġi identifikata bir-reqqa skond il-materjal tal-ħajt.

2 Poġġi l-kavilji korretti skont il-materjal tal-ħajt fit-toqob imtaqqbin.

3 Invita l-partijiet tal-iffissar tal-ħajt għall-postijiet li huma mtaqqba f'intervalli ta '50 ċm.

4 Daħħal l-istrixxi LED fis-slots fil-parti ta 'fuq u t'isfel tal-profil.

5 Żerżaq biex tgħaqqad id-diffużur tal-qiegħ mal-qoxra ta 'quddiem.

6 Qabbad l-istrixxi LED u s-sewwieq u s-sewwieq mal-mejn.

Kejbils jistgħu jinġarru fi ħdan il-profili għal konnessjonijiet multi-drive.

Ikkonsulta l-elettriċisti lokali biex tikseb riżultati preċiżi.

7 Agħfas il-qoxra ta' quddiem mal-pjanċa ta' wara sakemm tikklikkja f'postha.

8 Daħħal id-diffużur ta 'fuq.

9 Applika kolla mal-kantunieri interni biex tassigurahom fil-pożizzjoni.

10 Applika kolla mal-kantunieri esterni biex tassigurahom fil-pożizzjoni.

11 Applika l-adeżiv mal-partijiet tat-tmiem biex tassigurahom fil-pożizzjoni.

Paġna 1/2

Paġna tas-sors 2

QATGĦU TA ' STRIP LED & ESTENSJONI

Għal tħaddim korrett tal-post indikat fil-

l-Istrixxa LED, maqtugħa biss mid-dijagramma e.

Biex tevita skonnessjoni b fil-post indikat

bejn l-Istrixxa LED, istann biss d fit-tpinġija tal-kampjun.

DIJAGRAMA TAL-WIRING STRIP LED

Kontrollur MOX RGB

RG Dim Wifi

GB mmer

Sewwieq / Trasforma

mer

Paġna 2/2

Tpinġijiet oriġinali u paġni ta' referenza

LEUX ASSEMBLY GUIDE

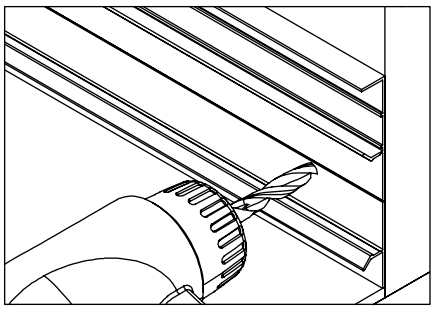

1 Installation can be done with screws or silicone glue. The correct application must be carefully identified according to the wall material.

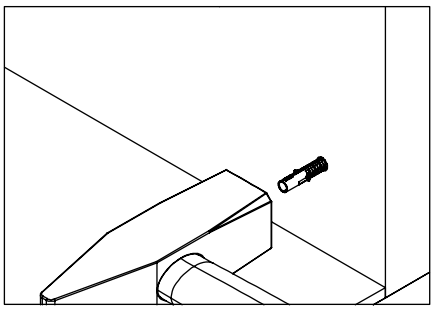

2 Place the correct dowels according to the wall material into the drilled holes.

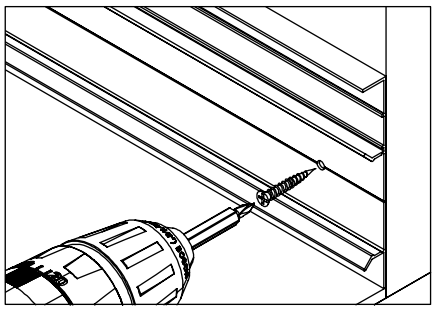

3 Screw the wall fixation parts to the places that are drilled at 50cm intervals.

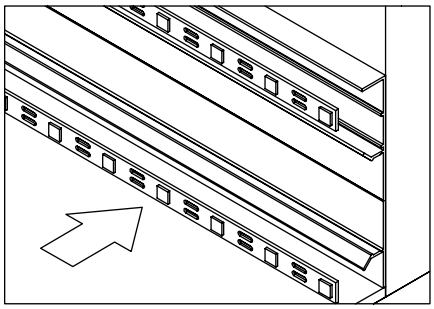

4 Insert the LED strips into the slots at the top and bottom of the profile.

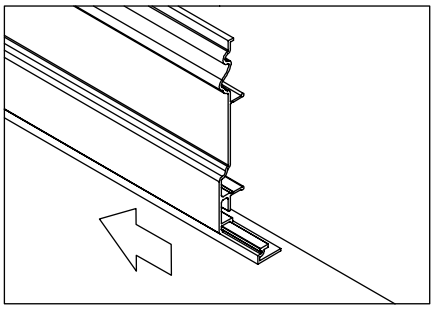

5 Slide to connect the bottom diffuser to the front cover.

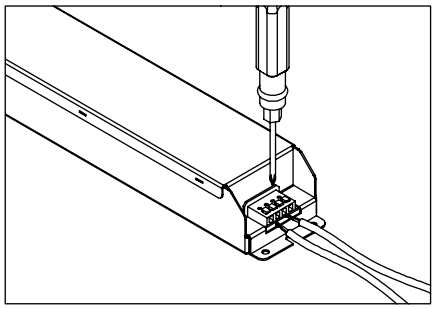

6 Connect the LED strips and the driver and the driver to the mains. Cables can be carried within the profiles for multi-drive connections. Consult local electricians to obtain accurate results.

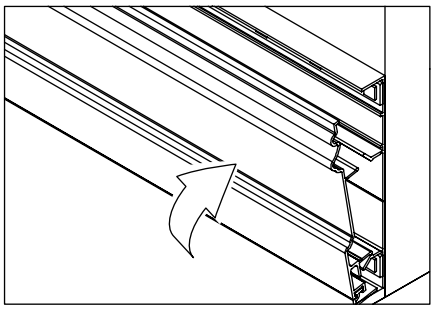

7 Press the front cover against the back plate until itclicks into place.

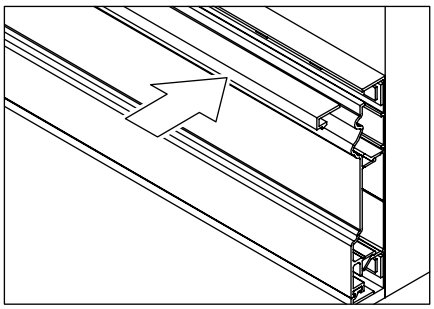

8 Insert the top diffuser.

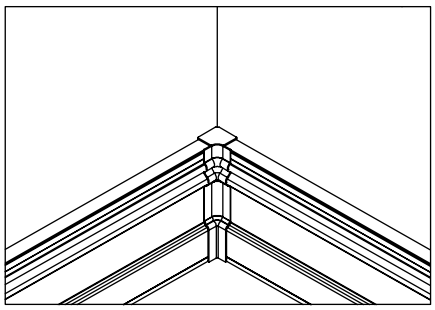

9 Apply adhesive to the internal corners to secure them in position.

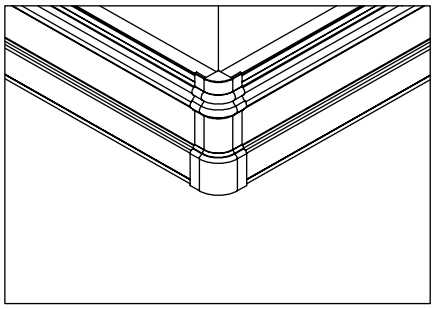

10 Apply adhesive to the external corners to secure them in position.

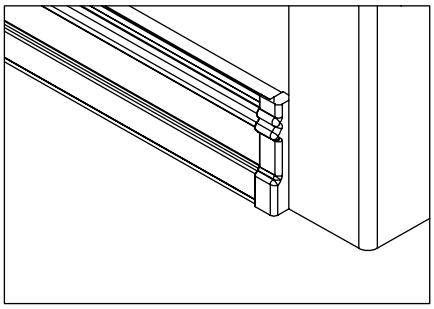

11 Apply adhesive to the ending parts to secure them in position.

LED STRIP CUTTING & EXTENDING

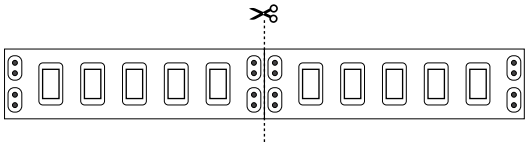

For correct operation of the LED Strip, cut only from the location indicated in the diagram.

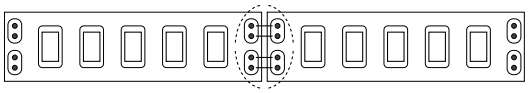

To avoid disconnection between the LED Strip, solder only at the location indicated in the sample drawing.
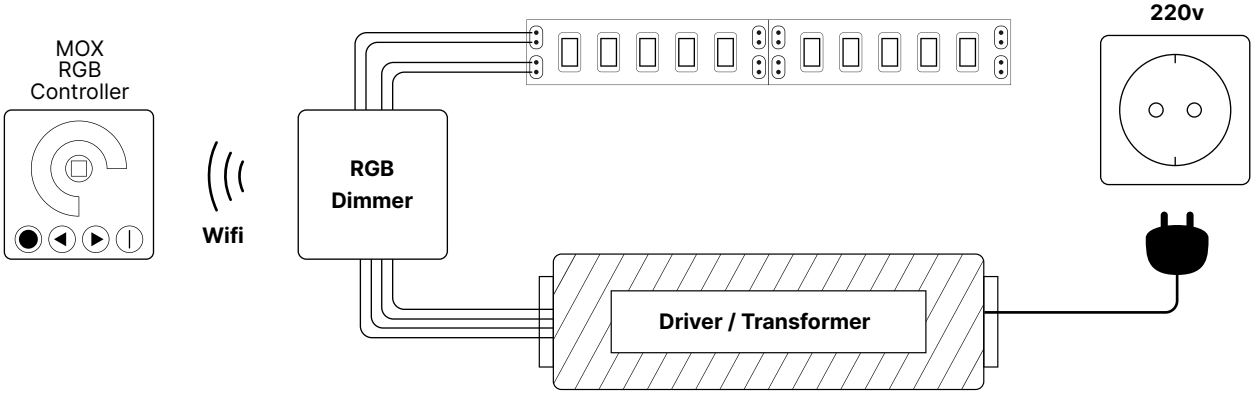
LED STRIP WIRING DIAGRAM