Sistemi MOX - dokumentazzjoni teknika

assembly-manual-crispo-en.pdf

Traduzzjoni teknika: ikkonsulta t-tpinġijiet oriġinali u l-paġni ta’ referenza għad-dimensjonijiet.

Paġna tas-sors 1

GWIDA GĦALL-ASSEMBLJA Crispo

1 Poġġi l-għodda tal-iffissar tal-ħajt f'intervalli ta '50 ċm u mmarka l-ħajt mit-toqob tal-kamin.

2 Drill il-punti li diġà mmarkajt.

3 Poġġi l-kavilji korretti skont il-materjal tal-ħajt fit-toqob imtaqqbin.

4 Invita l-għodda tal-iffissar tal-ħajt mal-postijiet li huma mtaqqba f'intervalli ta '50 ċm.

5 Arma l-profil fuq l-għodda tal-iffissar tal-ħajt bħal fl-istampa.

6 Kun żgur li d-dwiefer tal-profil u d-dwiefer tal-għodda tal-iffissar huma kompletament konnessi ma 'xulxin u kun żgur li l-lingwata tal-profil hija mwaħħla mal-art.

7 Aqta 'profili 45 grad għall-kantunieri esterni.

8 Waħħal l-għodda tal-iffissar tal-ħajt bil-mod li se jingħalqu mal-kantunieri u immunta l-profili li taqtgħu 45 grad fuqha.

9 Kun żgur li l-profili li huma maqtugħa 45 grad huma mwaħħla ma 'xulxin kompletament fil-kantunieri esterni.

10 Aqta profili 45 grad għall-kantunieri interni.

11 Waħħal l-għodda tal-iffissar tal-ħajt bil-manjiera li tkun magħluqa mal-kantunieri u arma l-profili li inti maqtugħa 45 grad fuqha.

12 Kun żgur li l-profili li huma maqtugħa 45 grad huma mwaħħla ma 'xulxin kompletament fil-kantunieri interni.

Paġna 1/1

Tpinġijiet oriġinali u paġni ta' referenza

CRISPO ASSEMBLY GUIDE

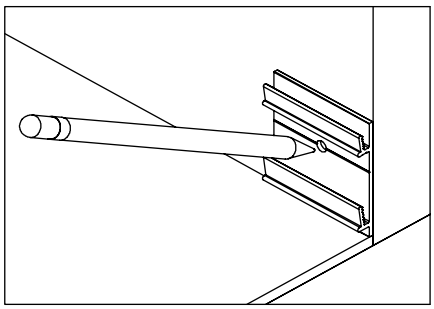

1 Place the wall fixation tools at 50cm intervals and mark the wall from the screw holes.

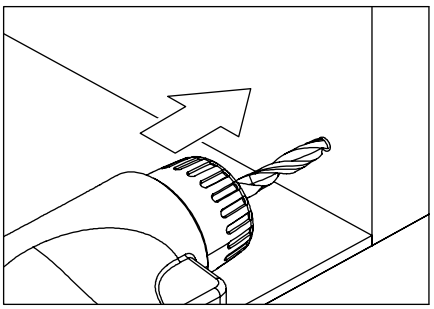

2 Drill the points that you have already marked.

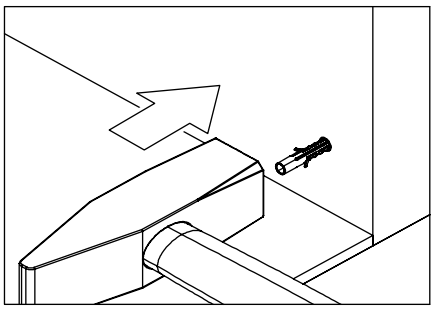

3 Place the correct dowels according to the wall material into the drilled holes.

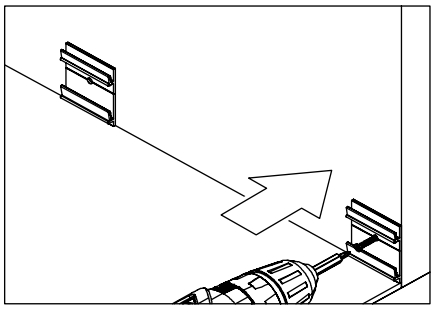

4 Screw the wall fixation tools to the places that are drilled at 50cm intervals.

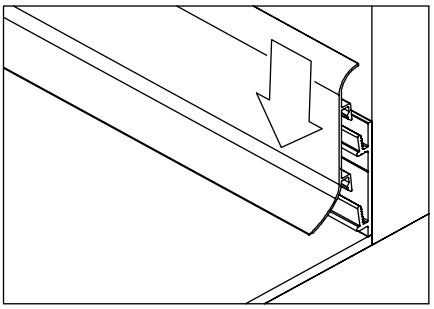

5 Assemble the profile on the wall fixation tools just like in the picture.

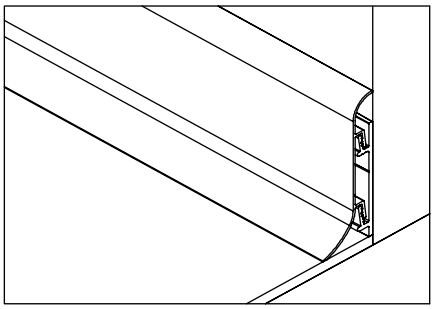

6 Make sure that the profile nails and the fixation tool's nails are completely connected to each other and be sure that the profile sole is fixed to the floor.

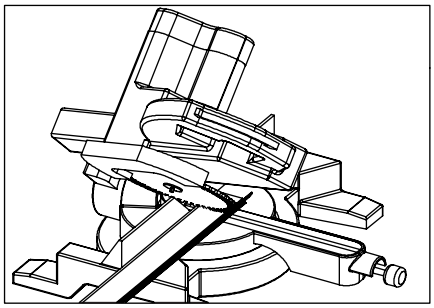

7 Cut profiles 45 degrees for external corners.

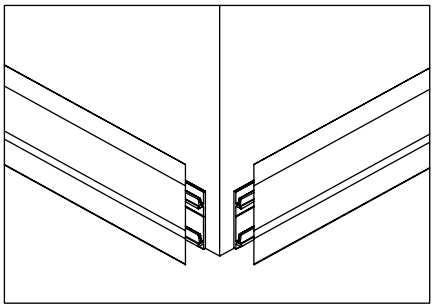

8 Affix the wall fixation tools in the manner that will be closed to the corners and assemble the profiles that you cut 45 degrees on it.

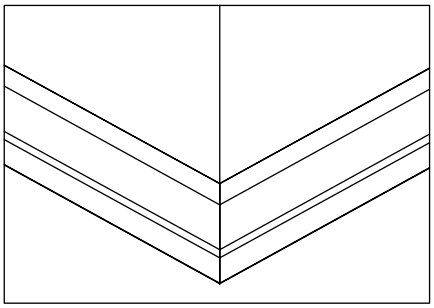

9 Make sure that the profiles that are cut 45 degrees are fixed to each other completely at the external corners.

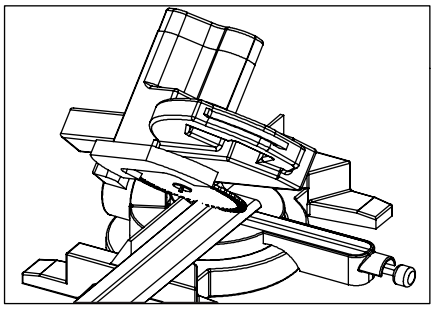

10 Cut profiles 45 degrees for internal corners.

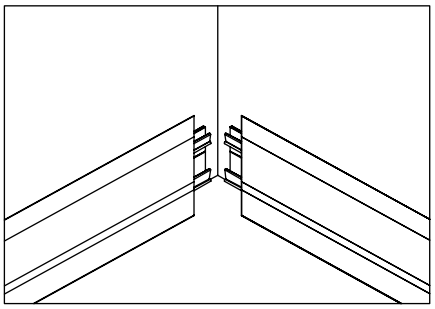

11 Affix the wall fixation tools in the manner that will be closed to the corners and assemble the profiles that you cut 45 degrees on it.

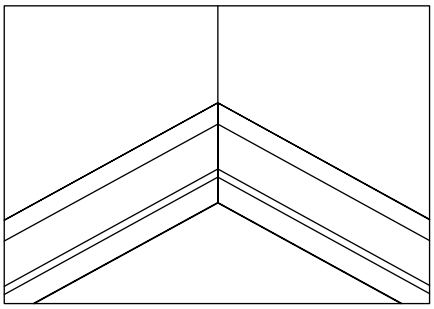

12 Make sure that the profiles that are cut 45 degrees are fixed to each other completely at the internal corners.