MOX Systems - doiciméadú teicniúil

assembly-manual-sentio-en.pdf

Aistriúchán teicniúil: féach ar na bunlíníochtaí agus ar na leathanaigh thagartha le haghaidh toisí.

Leathanach foinse 1

TREOIR Sentio TIONÓL

1 Cuir na huirlisí fosaithe balla ag eatraimh 50cm agus marcáil an balla ó na poill scriú.

2 Druileáil na pointí atá marcáilte agat cheana féin.

3 Cuir na duail cearta de réir an ábhair bhalla isteach sna poill druileáilte.

4 Scriú na huirlisí fosaithe balla chuig áiteanna a druileáiltear ag eatraimh 50cm.

5 Bailigh an phróifíl ar na huirlisí fosaithe balla díreach mar atá sa phictiúr.

6 Bí cinnte go bhfuil na tairní próifíle agus tairní na huirlise socraithe ceangailte go hiomlán lena chéile agus bí cinnte go bhfuil bonn na próifíle greamaithe den urlár.

7 Gearr próifílí 45 céim le haghaidh coirnéil seachtracha.

8 Greamaigh na huirlisí fosaithe balla ar an mbealach a dhúnfar do na coirnéil agus cruinnigh na próifílí a ghearrann tú 45 céim air.

9 Bí cinnte go bhfuil na próifílí atá gearrtha 45 céim socraithe dá chéile go hiomlán ag na coirnéil seachtracha.

10 Gearr próifílí 45 céim le haghaidh coirnéil inmheánacha.

11 Greamaigh na huirlisí fosaithe balla ar an mbealach a dhúnfar de na coirnéil agus cruinnigh na próifílí a ghearrann tú 45 céim air.

12 Bí cinnte go bhfuil na próifílí atá gearrtha 45 céim socraithe dá chéile go hiomlán ag na coirnéil inmheánacha.

Leathanach 1/1

Líníochtaí bunaidh agus leathanaigh tagartha

SENTIO ASSEMBLY GUIDE

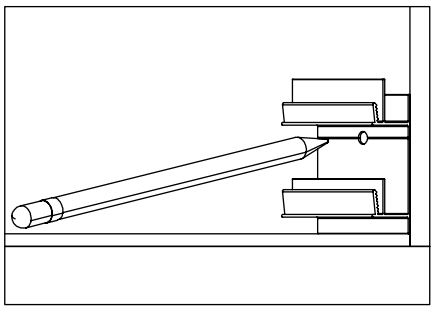

1 Place the wall fixation tools at 50cm intervals and mark the wall from the screw holes.

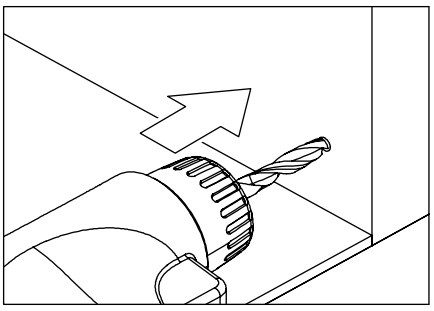

2 Drill the points that you have already marked.

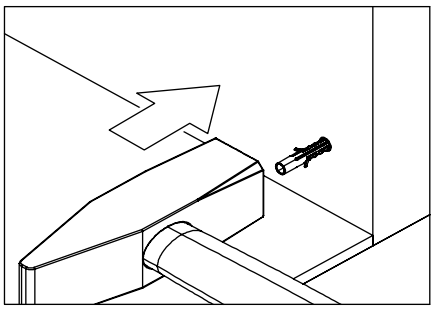

3 Place the correct dowels according to the wall material into the drilled holes.

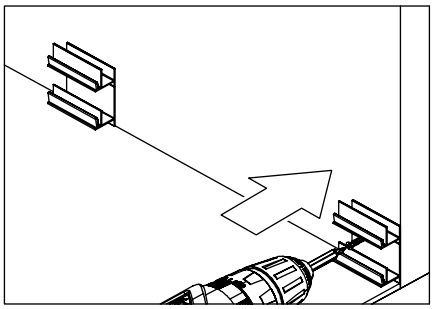

4 Screw the wall fixation tools to places that are drilled at 50cm intervals.

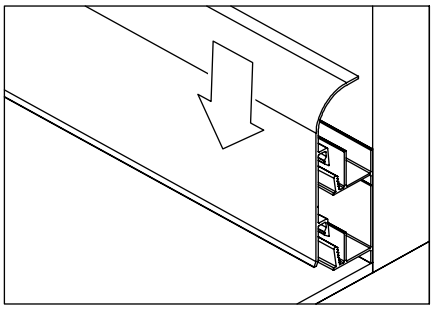

5 Assemble the profile on the wall fixation tools just like in the picture.

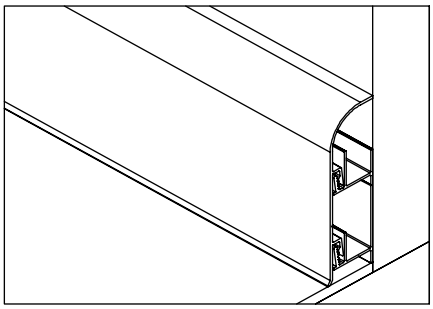

6 Make sure that the profile nails and the fixation tool's nails are completely connected to each other and be sure that the profile sole is fixed to the floor.

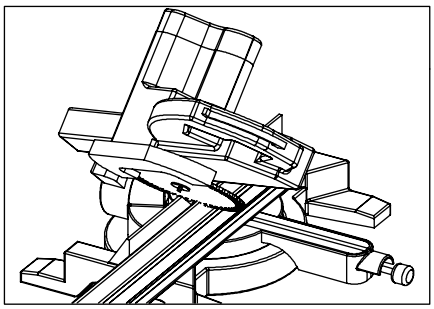

7 Cut profiles 45 degrees for external corners.

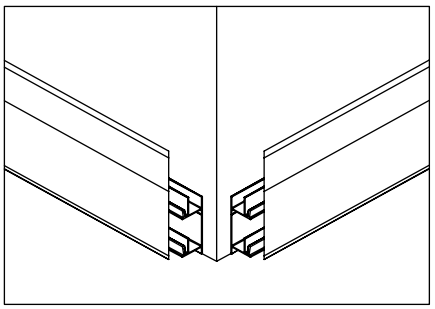

8 Affix the wall fixation tools in the manner that will be closed to the corners and assemble the profiles that you cut 45 degrees on it.

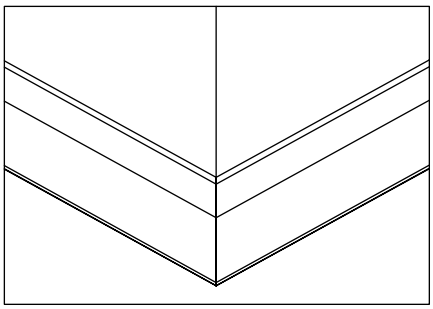

9 Make sure that the profiles that are cut 45 degrees are fixed to each other completely at the external corners.

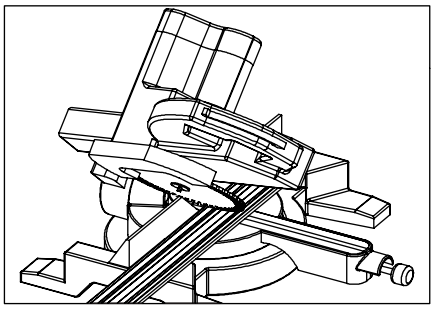

10 Cut profiles 45 degrees for internal corners.

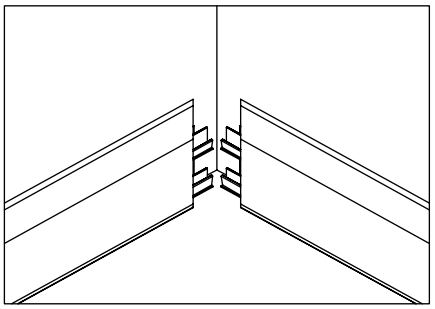

11 Affix the wall fixation tools in the manner that will be closed to the corners and assemble the profiles that you cut 45 degrees on it.

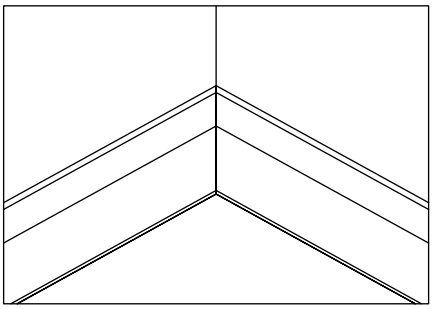

12 Make sure that the profiles that are cut 45 degrees are fixed to each other completely at the internal corners.